Next-Generation Mega Air-Handling Units

Tom Wells, business-development manager,
ventilation and air conditioning, ebm-papst Inc.

Participation Guidelines

To receive PDH credit:

- You must be present for the entire session and complete a post-course online evaluation.
- Credit cannot be issued to anyone who does not complete the evaluation.
- A link to the evaluation will be provided at the end of the session and e-mailed in the weeks following the 2024 AHR Expo.

AMCA International has met the standards and requirements of Registered Continuing Education Program (RCEP). Credit earned upon completion of this program will be reported to RCEP at RCEP.net. A certificate of completion will be issued to each participant. As such, it does not include content that may be deemed or construed to be an approval or endorsement by RCEP.

ENGINEERING

RCEP

REGISTERED CONTINUING EDUCATION PROGRAM

Attendance for the entire presentation
AND a completed evaluation are required
for PDH credit to be issued.

DISCLAIMER

The information contained in this course is provided by AMCA International as an educational service and is not intended to serve as professional engineering and/or manufacturing advice. The views and/or opinions expressed in this educational activity are those of the speaker(s) and do not necessarily represent the views of AMCA International. In making this educational activity available, AMCA International is not endorsing, sponsoring, or recommending a particular company, product, or application. Under no circumstance, including negligence, shall AMCA International be liable for any damages arising out of a party's reliance on or use of the content contained in this course.

COPYRIGHT MATERIALS

Seminar Agenda

1. Typical AHUs and Review
2. Fan and Motor Technology Advancements
3. Next Gen Mega AHU Design

Learning Objectives

1. Understand how an AC motor works
2. Understand how an EC motor works
3. Understand how digitally connected EC motors bring value
4. Understand how different shaped impellers help in different applications

Why Give this Seminar?

- 2018 Designing Mega AHUs Column in the ASHRAE Engineer's Notebook

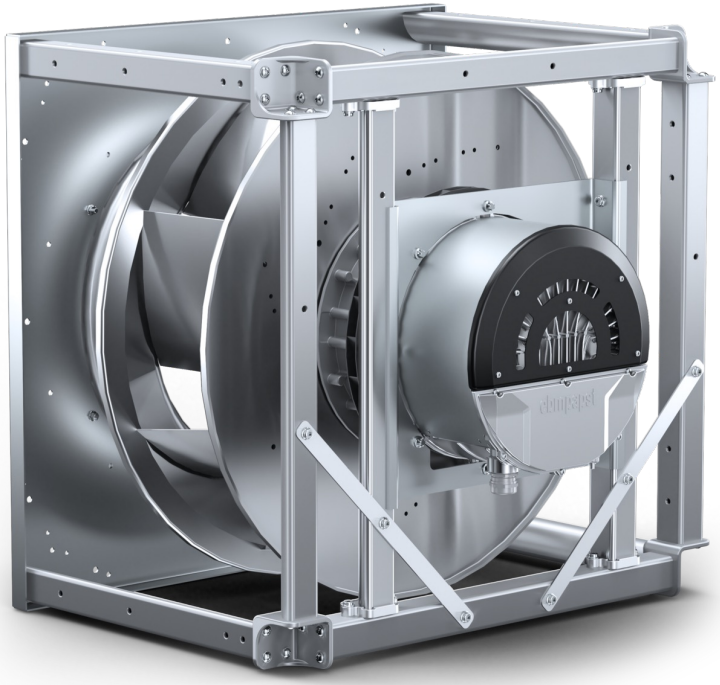

1 Typical AHUs and Review

AHU Review

What is an Air Handling Unit

- An Air Handling Unit provides conditioned air to a space
- Conditioning the air requires cooling or heating, as well as filtering
- Common components:
  1. Supply Fan*
  2. Exhaust Fan*
  3. Heat Exchanger
     1. Evaporator or heating coils
  4. Filters

*Our Seminar today will focus on the shifting technology to larger fans that accommodate larger AHUs

AHU Review

AHU General Process

1. Outside Air enters
2. Heat Recovery
3. Recirculation air mixing
4. Outside Air Filter
5. Heat Exchanger
6. Supply fan
7. Supply Air Filter
8. Enters Duct Work
9. Returns from space
10. Return fan
11. A Possible Recirculation
12. Possible Heat recovery Wheel
13. Exhaust

How is a Mega AHU Different?

- AHU designed for 100,000+ CFM
  - Typical Air handler moves 2,000-10,000 CFM
- Designed for very large applications with large load
  - High Rise buildings
  - Apartment buildings
  - Data Centers
- High Static Pressures
- One massive unit per large building
- Contains the same basic components as a regular Air Handler

Mega AHU Advantages

- Cheaper costs on high rises*
  - Installation
  - Maintenance
  - Plumbing
- Easier to affix economizers*
  - Easier path to efficiency
- Cheaper operation at lower capacities, compared to running floor-by-floor AHUs*
- Smaller overall space claim than floor-by-floor AHUs*

*Claims made by Steve Taylor ASHRAE Engineer's Notebook 2018

2 Fan and Motor Technology Advancements

AC Induction Motors

How Do They Work?

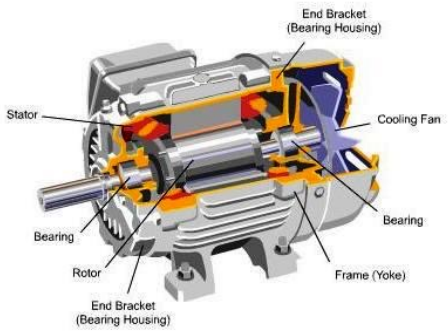

Cutaway View of Motor

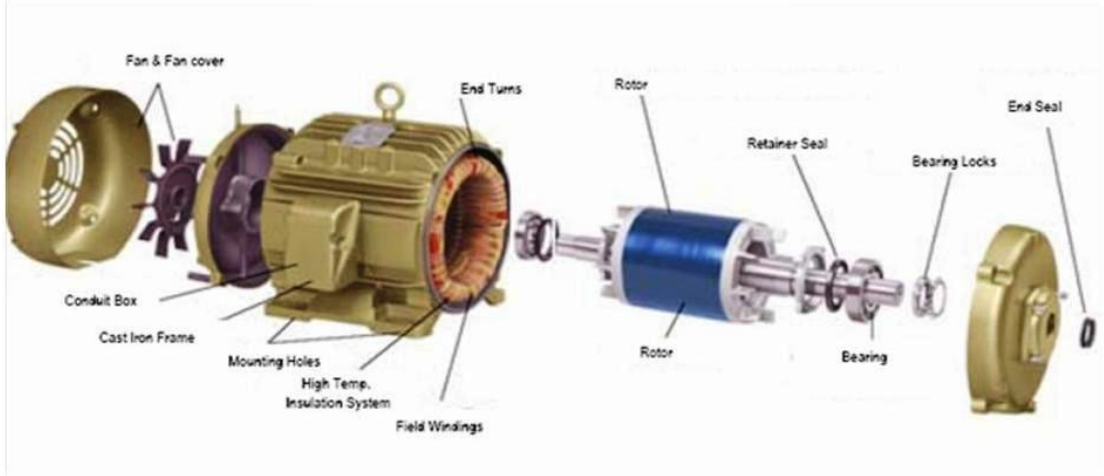

AC induction motors…

- Use the natural frequency of AC current to create a rotating magnetic field
- Utilize a stator with energized coils and a rotor with either permanent magnets or additional coils
- Operate at one speed dependent on frequency and number of cores
- Produce torque via a "slip" between the rotor and stator
- Are often paired with variable frequency drive (VFD) to control speed

AC Induction Motors

Features

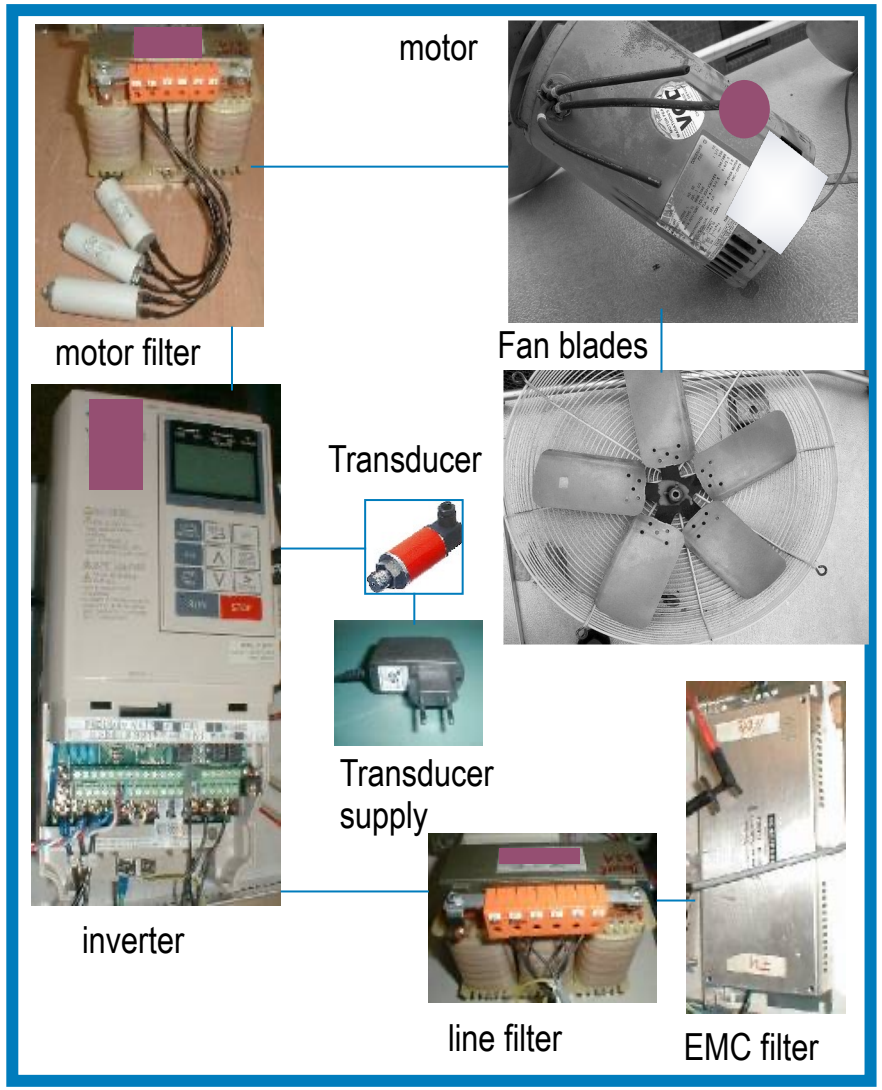

- AC motors require a VFD to control speed.
- VFD outputs need to be filtered to prevent damage to motor bearings
- With VFDs, speed is often not clearly defined
- Speed can only be controlled down to about 50% before overheating
- AC motors will need an external controller for programmable operation
- Slip losses within the motor result in max motor efficiencies around 85%
- AC motors are much larger than similar rated EC Motors

EC Motors

What is EC?

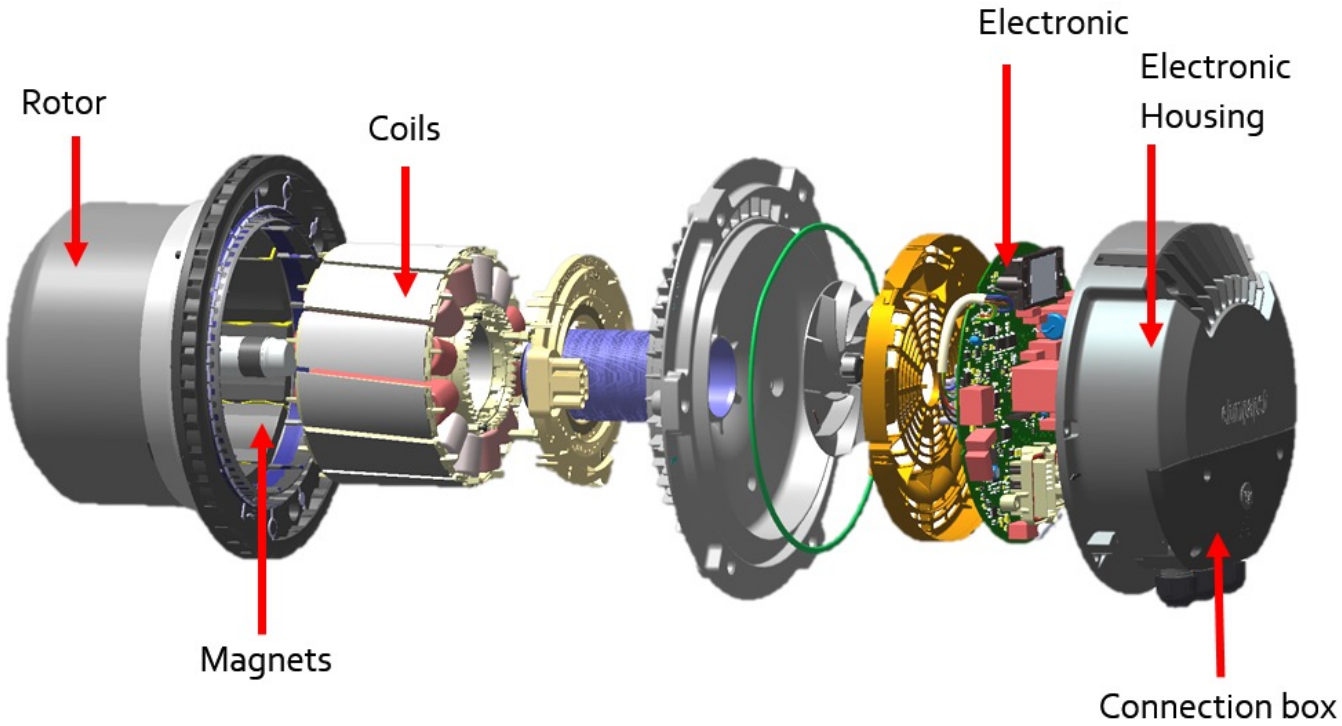

- EC stands for Electronically Commutated
- Operates like a traditional brushless DC motor, with coil windings and permanent magnets
- Integrated commutation electronics
- Can be designed to work with either AC or DC input
- AC input is rectified to DC by the electronics

Process Overview of an EC motor

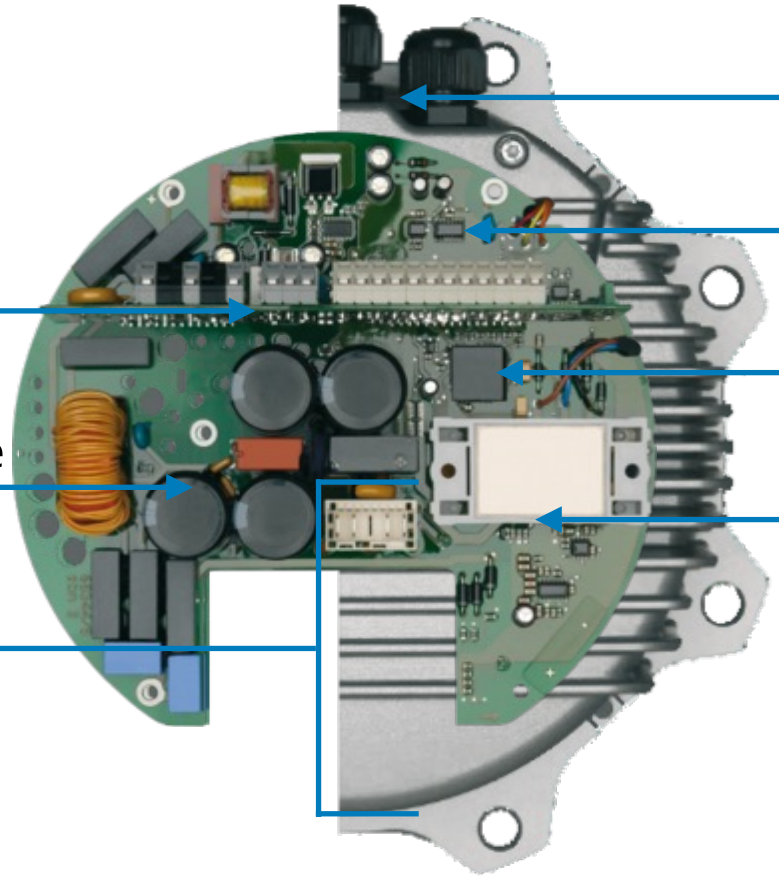

EC Motors

Features

- Matched system of motor and drive electronics
- Integrated electronics allow for speed control and programmable operation without additional components
- Speed control and feedback is precise
- Speed can be controlled down to about 10%
- No slip losses allow for 90% motor efficiency
- Much more compact than AC motors

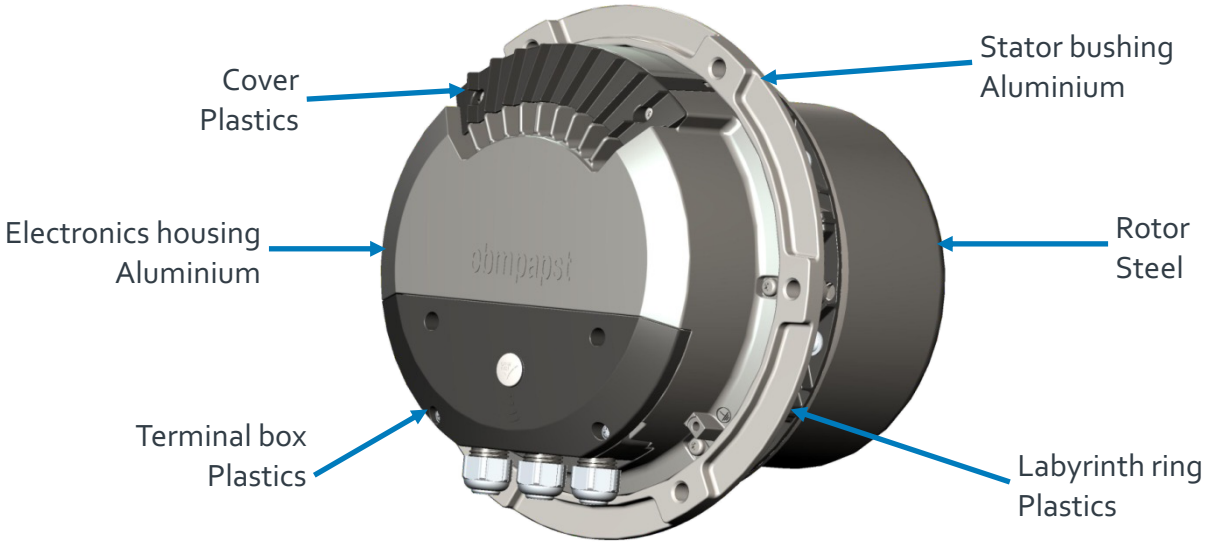

EC vs AC Systems

System Sizes

Conventional AC centrifugal fans

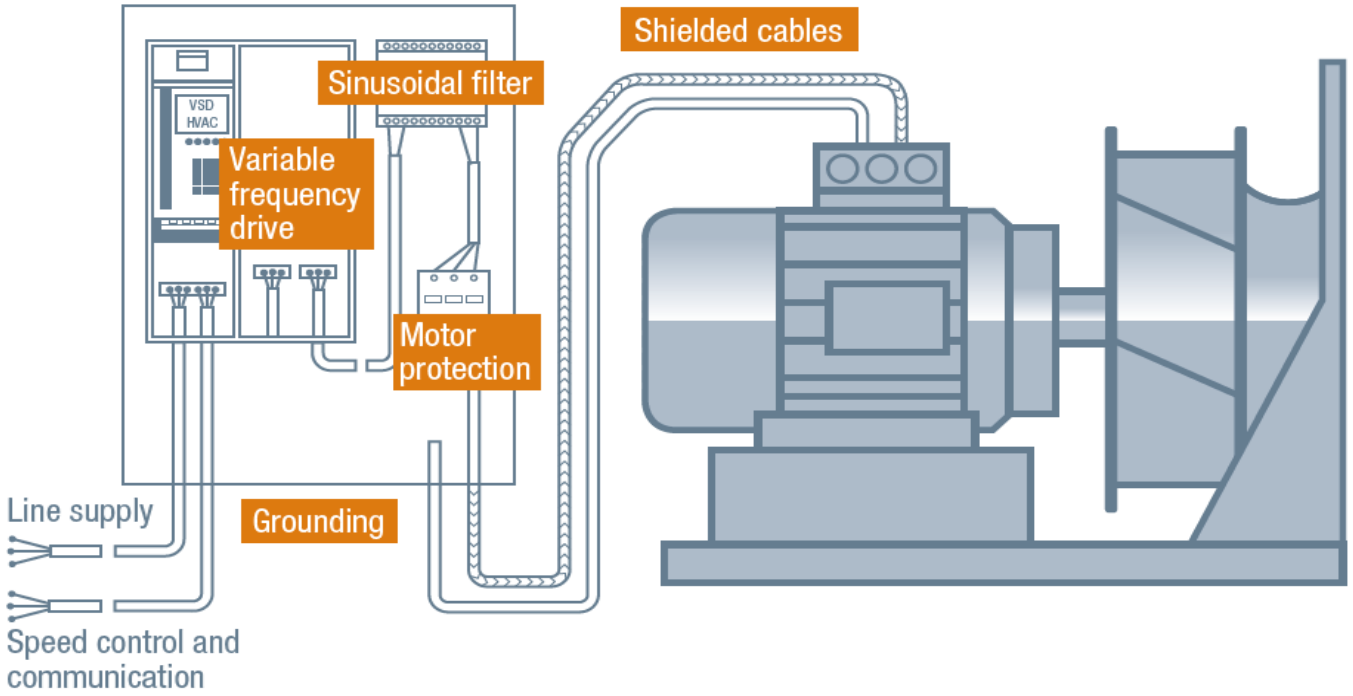

EC centrifugal fans

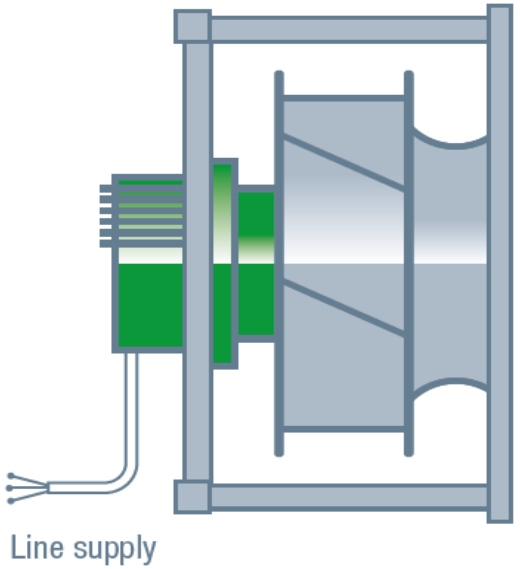

Next Gen AHU Design

Optimized Wheels

Technical features

Airfoil blade
Rounded
blade leading edge

Inclined
blade trailing edge

Rotating diffusor

Tapered
connection flange

Aerodynamic benefits

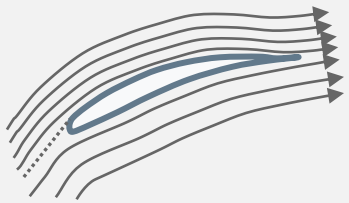

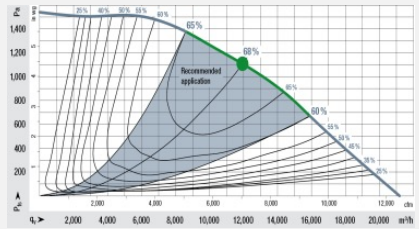

- ✓ Low-loss inflow
- ✓ No flow separation
- ✓ Wide efficiency peak
- ✓ High stability

- ✓ Turbulence-free downstream flow
- ✓ Reduced tonal noise

- ✓ Regain of static pressure
- ✓ Increased efficiency

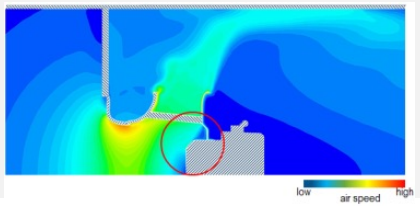

- ✓ **Reduced flow losses in inlet area**

EC Fans

Past Designs

- Same matched system of motor and drive electronics
- Same ~90% motor + drive efficiency
- More compact than comparable AC systems
- Limited max input power to 12kW

EC Fans

New Designs

- Same matched system of motor and drive electronics
- Same ~90% motor + drive efficiency
- More compact than comparable AC systems
- Max input power up to 24kW

Max 12kW

Max 24kW

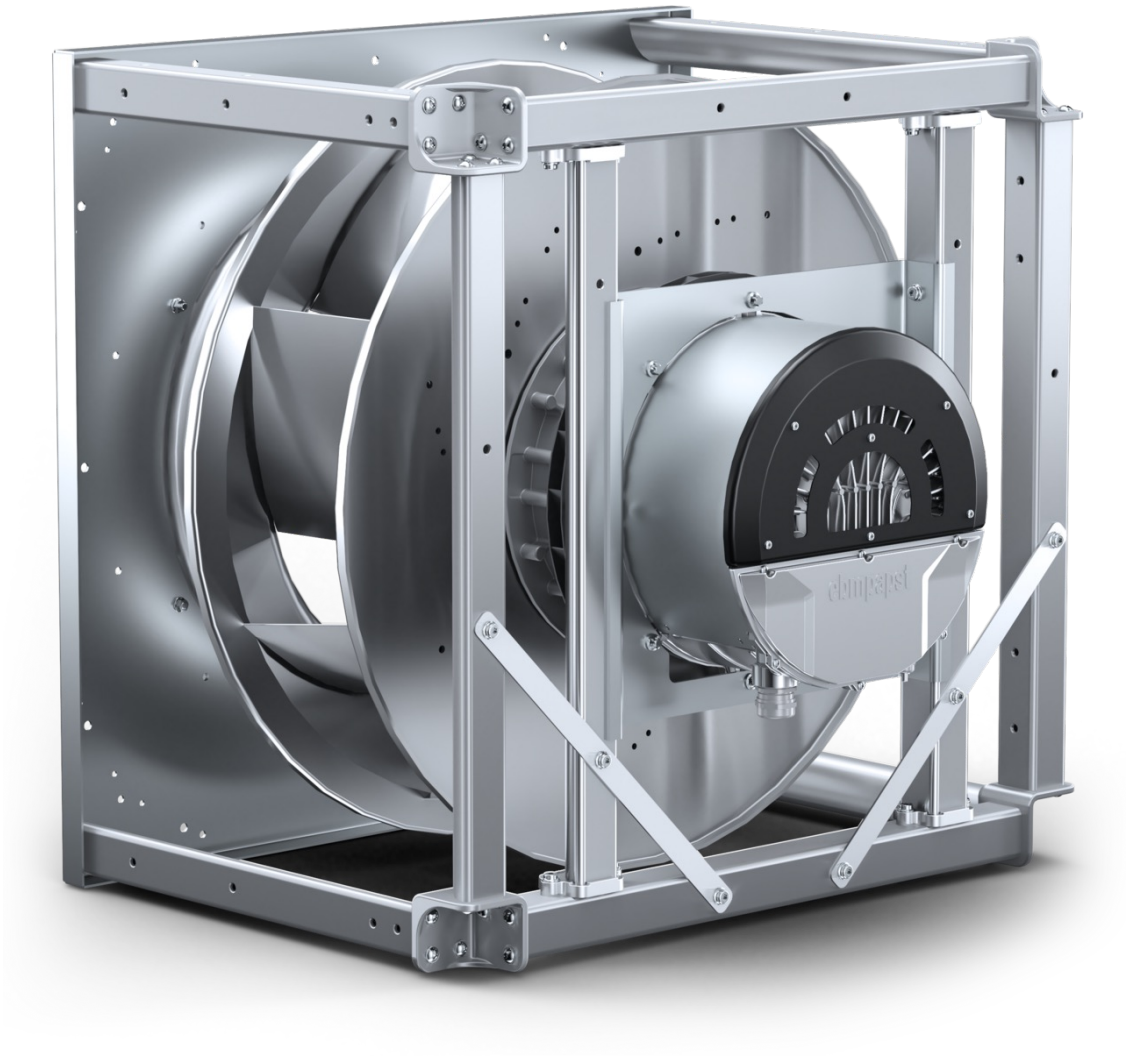

EC Fans

New Features

- Digital Connectivity
- Resonance avoidance

Max 12kW

Max 24kW

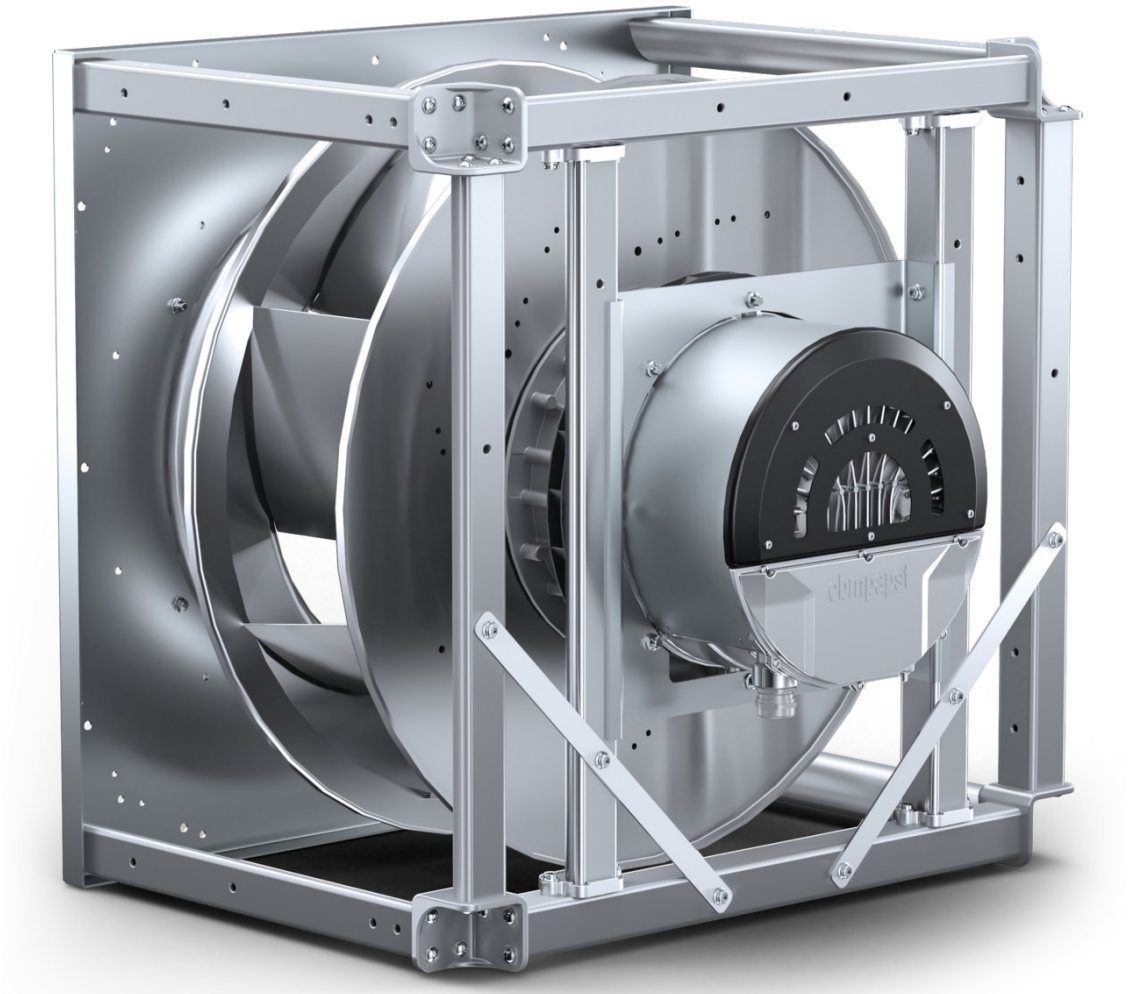

3

Next Gen Mega AHU Design

Old Mega AHU Fan Design

How did they used to look?

- AC motors controlled by VFDs
- Potential belt losses and maintenance
- VFD balancing and redundancy issues

- Motor + impeller sourcing
- Large arrays of small EC fan arrays with high buy in cost

traditional concept

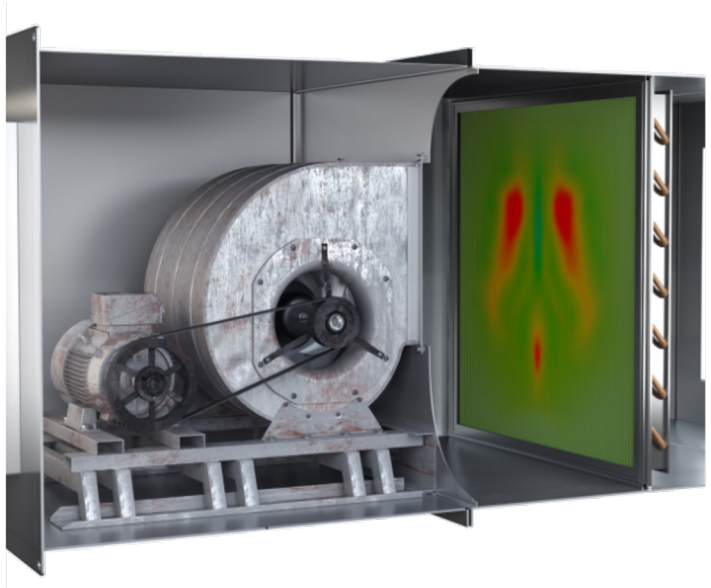

FanGrid system ~2015

Next Gen AHU Design

System Benefits- Moving to EC backward curved

- Reduced AHU Length
- Reduced Sound Power
- Easier replacement
- Easier retrofit applications

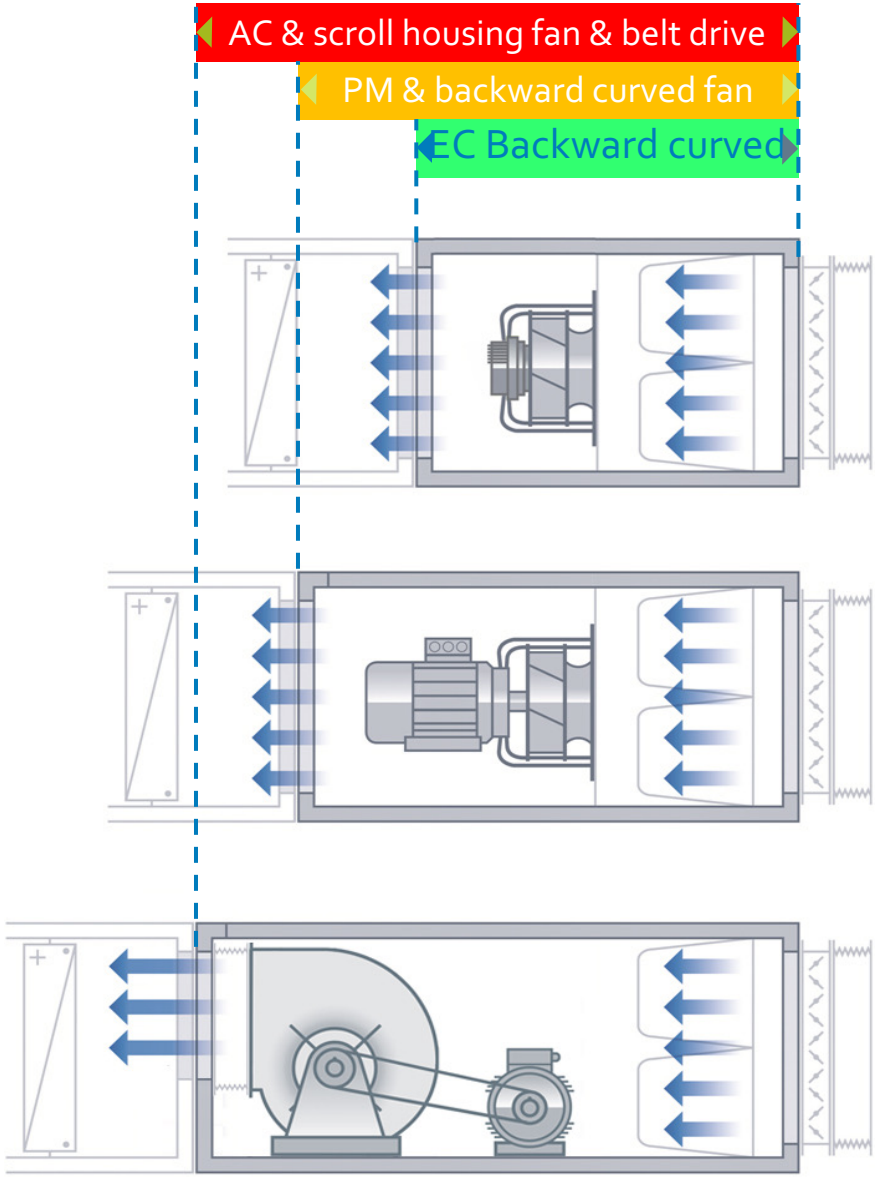

Next Gen AHU Design

System Benefits- Optimized Wheels

- Intake and Exhaust of fan system are significantly more axial than traditional designs for improved application efficiency

Next Gen AHU Design

System Benefits- Optimized Systems

- “Partial Width”
- Large Motors 24 kW
- Applications need 8-10” of Static pressures
  - Hospitals
  - High Rise buildings
  - Data centers

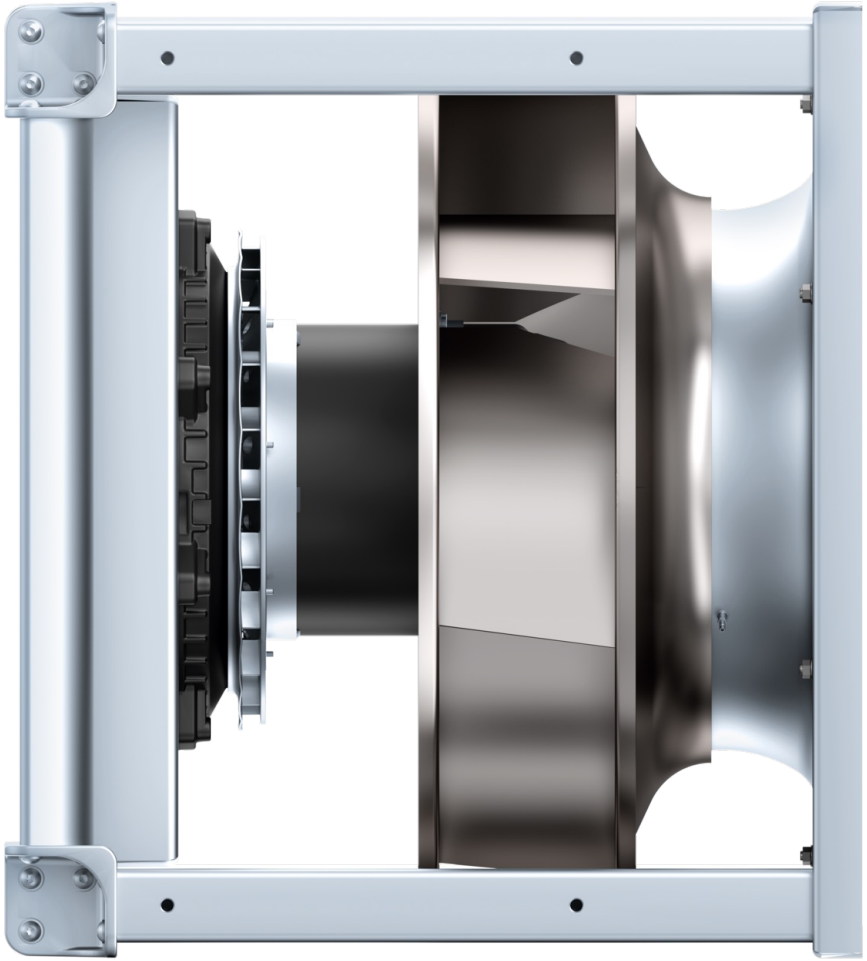

Next Gen AHU Design

System Benefits- Larger EC Fan Systems

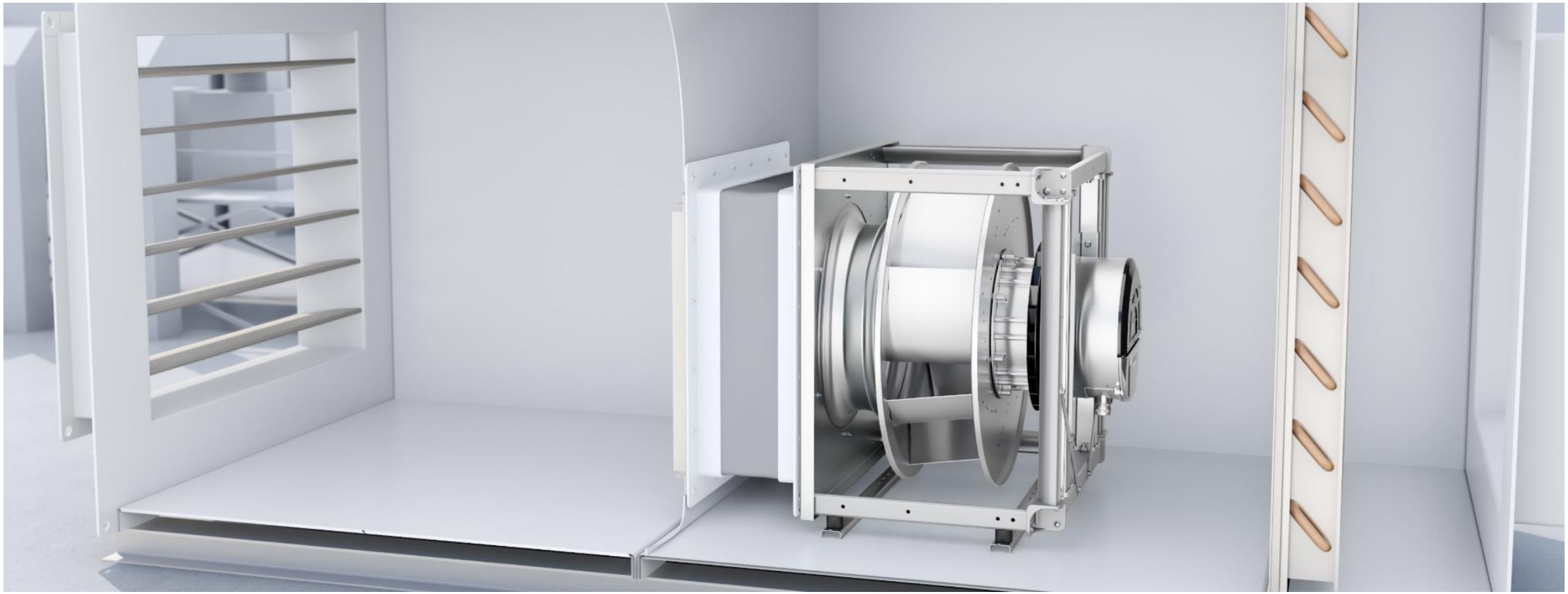

- Larger EC fans bring about the possibility of EC fan arrays with less overall fans
- Potentially lowering buy in costs and manufacturing costs

Next Gen AHU Design

Digital Solutions

Connectivity to EC fans provides data faster than ever before

- Predictive maintenance for AHU uptime
- Fan Speed
- Airflow
- Temperatures
- Vibration Skip Bands

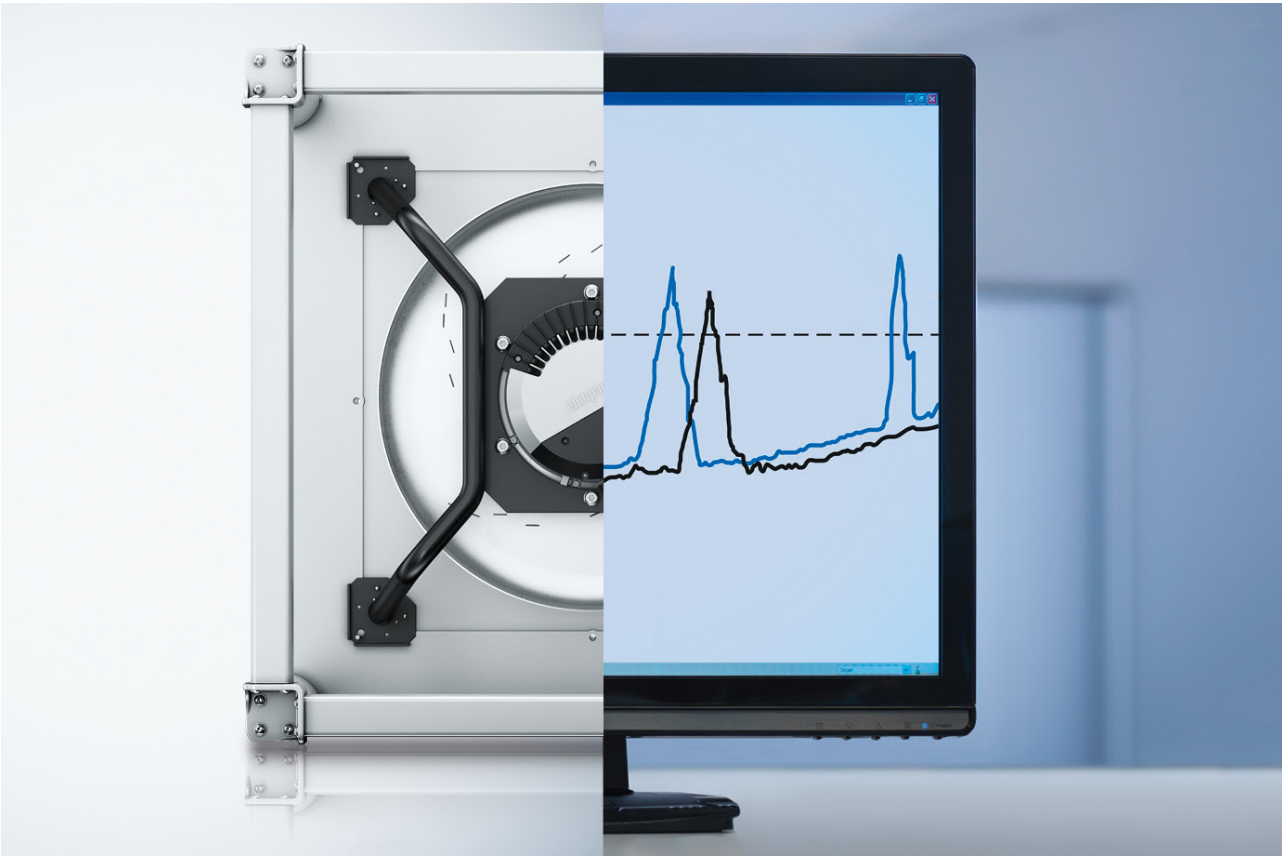

Thank you for your attention

ebm-papst Inc.
100 Hyde Road
Farmington, CT 06034

Contact person

Tom Wells
Business Development Manager
Ventilation & Air Conditioning

Email: thomas.wells@us.ebmpapst.com

To receive PDH credit, you must complete the post-course evaluation